REV.	DESCRIPTION	DATE	APPVD
A	INITIAL RELEASE		

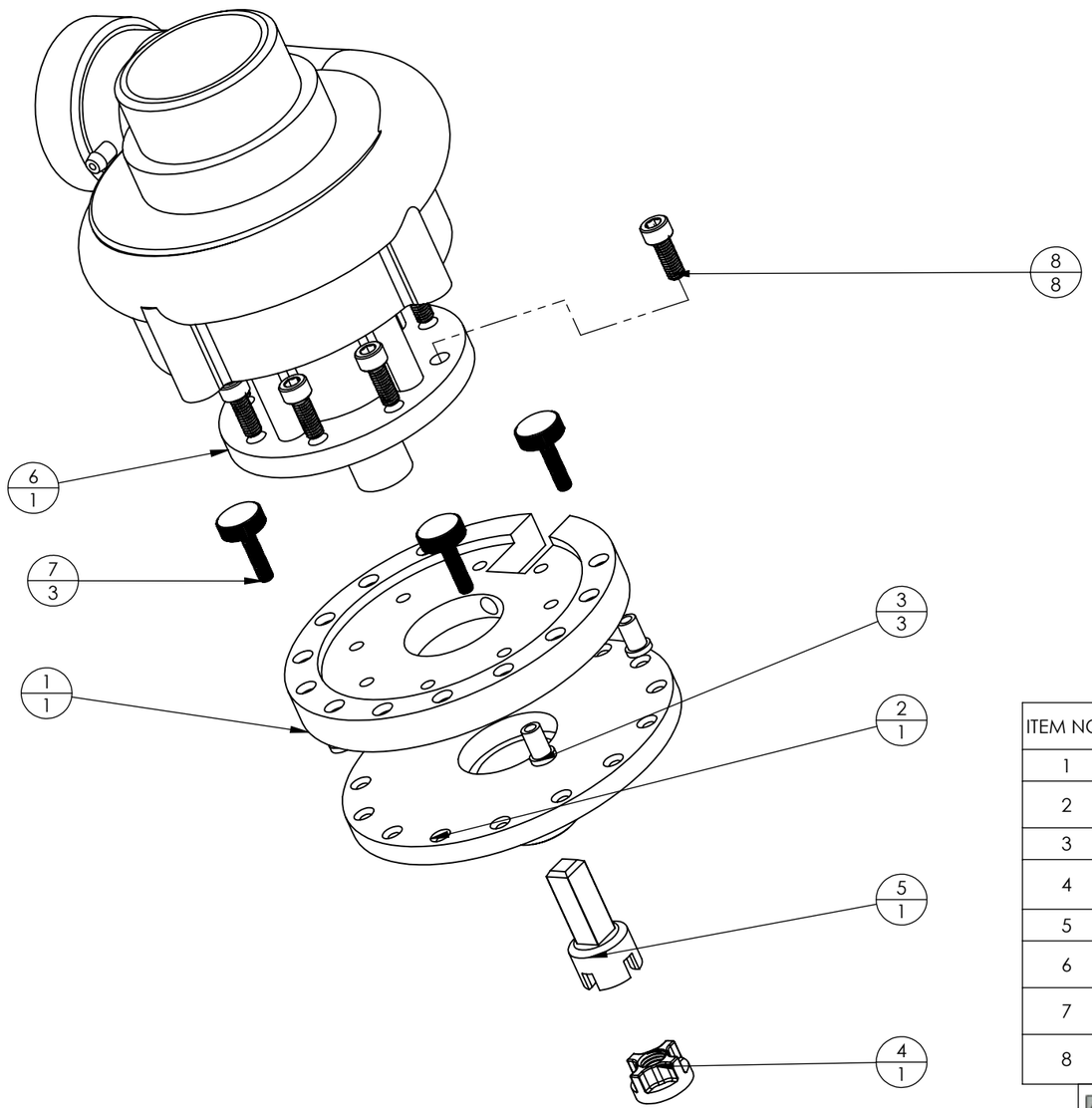

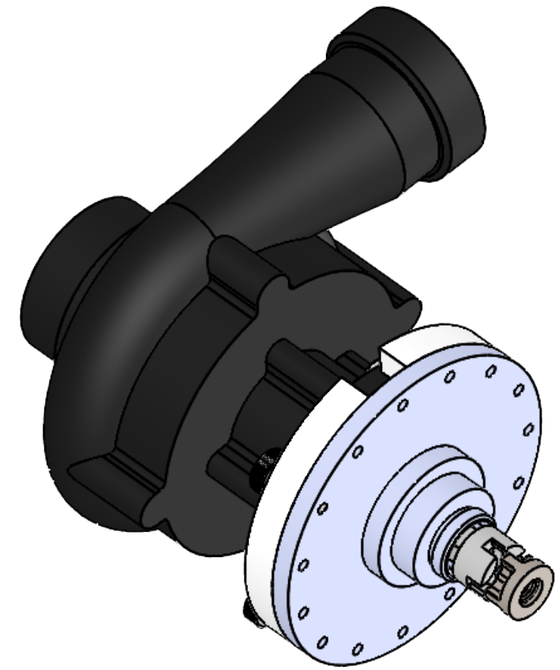

ITEM NO.	FILE NAME	DESCRIPTION	MAKE/PICK	VENDOR	VENDOR NO.	QTY
1	040722	PUMP BRKT NO LOBES, THREADED	M	MANUFACTURER	040722	1
2	040725	MOTO BRACKET NO LOBE VERSION	M	MANUFACTURER	040725	1
3	040318	THUMBSCREW RETAINER	M	MANUFACTURER	040318	3
4	041450	NUT, 4 PRONG, V3	M	MANUFACTURER	041450	1
5	041451	DRIVER, 4 PRONG, V3	M	MANUFACTURER	041451	1
6	043602	5HP IRRIGATION PUMP	P	TAIZHOU XINYI TECH CO, HTTPS://WWW.HQPART.COM	NA	1
7	043604	PLASTIC HEAD THUMB SCREW M5X.8, 20mm	P	MCMASTER-CARR	96016A245	3
8	043603	M6X1, 16mm SOCKET HEAD CAP SCREW	P	MCMASTER-CARR	91292A135	8

CC BY-SA: This license allows reusers to distribute, remix, adapt, and build upon the material in any medium or format, so long as attribution is given to the creator. The license allows for commercial use. If you remix, adapt, or build upon the material, you must license the modified material under identical terms.

CC BY-SA includes the following elements:

BY - Credit must be given to the creator

SA - Adaptations must be shared under the same terms

© 2021 Global Health Labs, Inc

UNLESS OTHERWISE SPECIFIED
DIMENSIONS ARE IN MILLIMETERS [IN]
BREAK EDGES, .12-.25MM
BLEND ALL RADII, REMOVE ALL BURRS
SURFACE FINISH: 125 Ra MAX
ANGULAR: MACH ± 0°30', BEND: ±3°
ONE PLACE DECIMAL: ± .75MM
TWO PLACE DECIMAL: ± .25MM
THREE PLACE DECIMAL: ± .1MM

INTERPRET GEOMETRIC TOLERANCING PER: ASME Y14.5 - 2009

DO NOT SCALE DRAWING

	NAME	DATE
DRAWN	MB	Dec 08, 2020
CHECKED		

MATERIAL:

FINISH:

COMMENTS:

DESCRIPTION:

H2GO pump and attachment hardware for Bajaj CT 100

SIZE: B
DWG. NO.: 043596
REV.: A

DRAWING SCALE 1:4

SHEET 1 OF 1

Thursday, March 4, 2021 6:17:45 AM