REV.	DESCRIPTION	DATE	APPVD
A	INITIAL RELEASE		

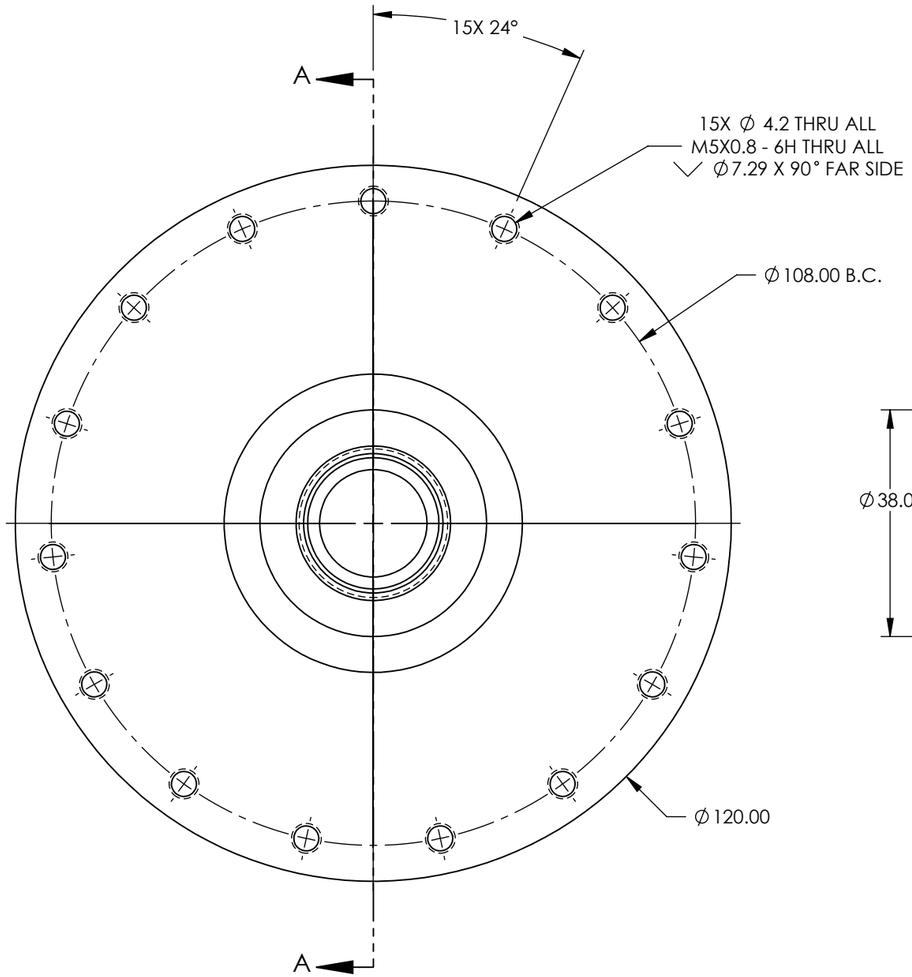

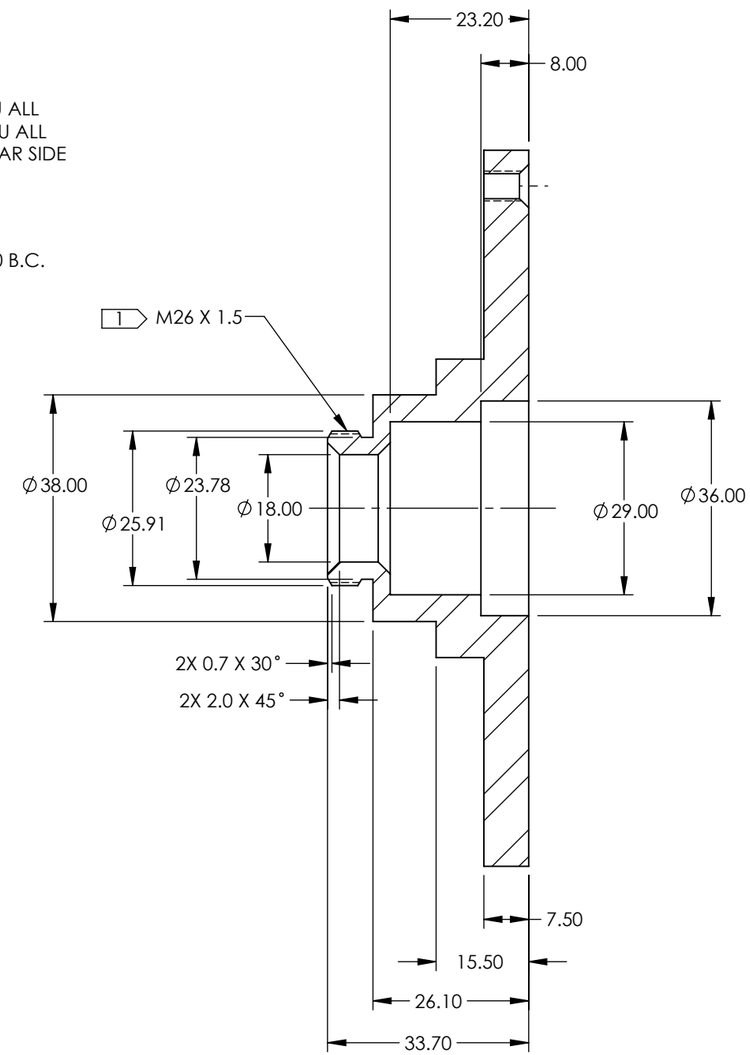

SECTION A-A

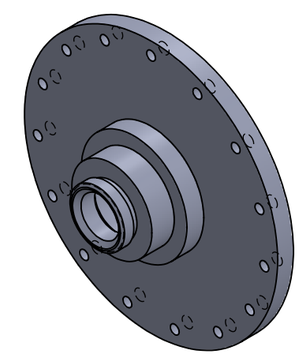

ISO VIEW SCALE 1:2

NOTES:

1 CUSTOM M26 X 1.5 EXTERNAL THREAD PER:

MAJOR DIA: 25.968 - 25.732MM
MINOR DIA: 24.344 - 23.920MM
PITCH DIA: 24.883MM
MEASURE: 26.632MM OVER 1MM WIRES

2. REMOVE ALL BURRS AND SHARP EDGES

CC BY-SA: This license allows reusers to distribute, remix, adapt, and build upon the material in any medium or format, so long as attribution is given to the creator. The license allows for commercial use. If you remix, adapt, or build upon the material, you must license the modified material under identical terms.

CC BY-SA includes the following elements:

BY - Credit must be given to the creator

SA - Adaptations must be shared under the same terms

© 2021 Global Health Labs, Inc

UNLESS OTHERWISE SPECIFIED
DIMENSIONS ARE IN MILLIMETERS [IN]
BREAK EDGES, .12-.25MM
BLEND ALL RADII, REMOVE ALL BURRS
SURFACE FINISH: 125 Ra MAX
ANGULAR: MACH ± 0°30', BEND: ±3°
ONE PLACE DECIMAL: ± .75MM
TWO PLACE DECIMAL: ± .25MM
THREE PLACE DECIMAL: ± .1MM

INTERPRET GEOMETRIC TOLERANCING PER: ASME Y14.5 - 2009

DO NOT SCALE DRAWING

	NAME	DATE
DRAWN	JO	12/17/2020
CHECKED		

MATERIAL: 304 SS

FINISH:

COMMENTS:

DESCRIPTION: Moto Bracket No Lobe Version

SIZE	DWG. NO.	REV.
B	040725	-

DRAWING SCALE 1:1 | SHEET 1 OF 1

Thursday, December 17, 2020 3:22:26 PM