REV.	DESCRIPTION	DATE	APPVD
A	INITIAL RELEASE		

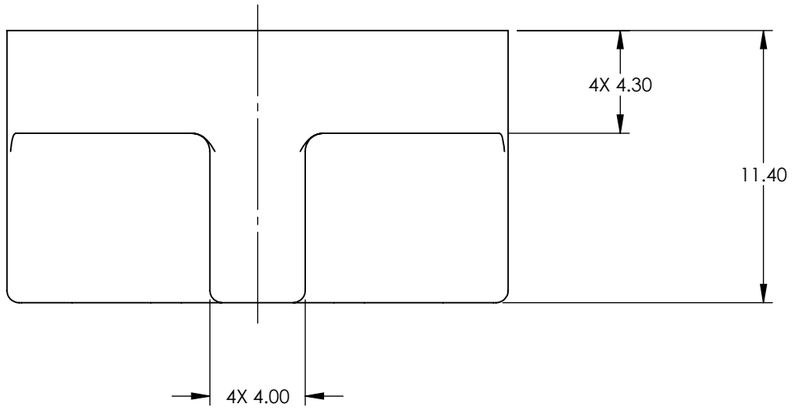

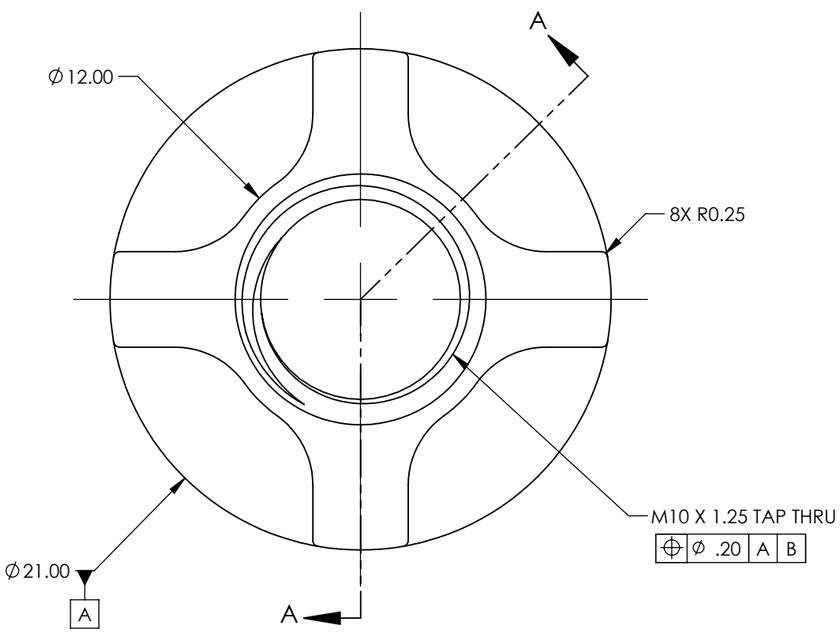

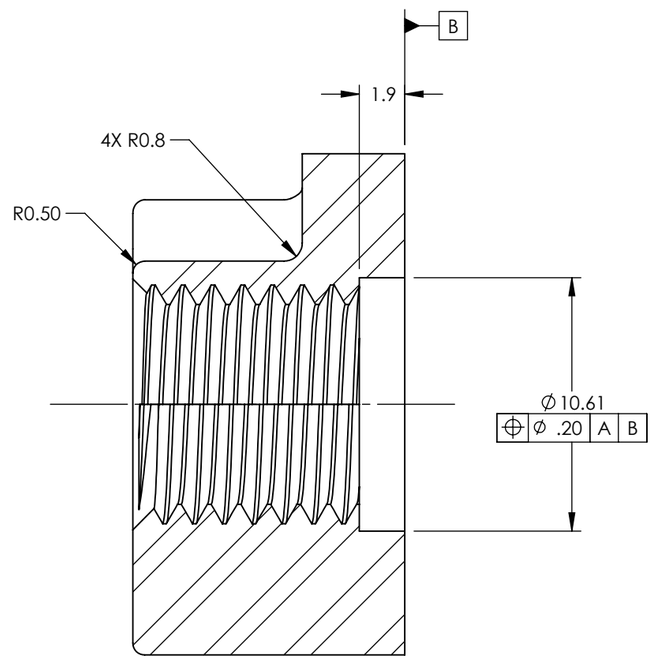

SECTION A-A

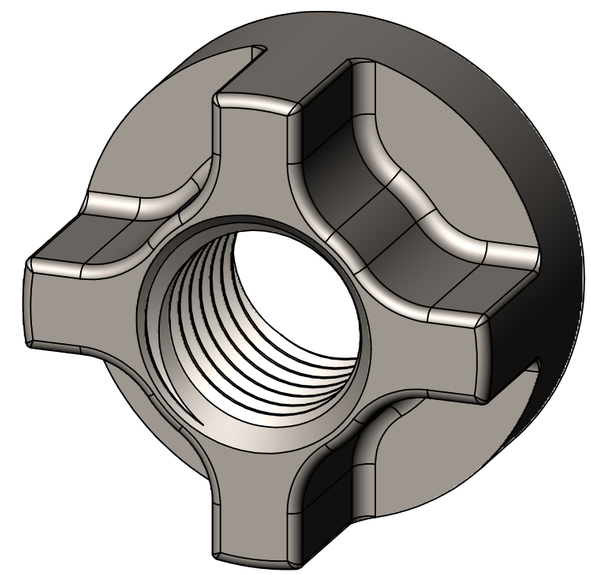

NOTES:

1. REMOVE ALL BURRS AND SHARP EDGES

CC BY-SA: This license allows reusers to distribute, remix, adapt, and build upon the material in any medium or format, so long as attribution is given to the creator. The license allows for commercial use. If you remix, adapt, or build upon the material, you must license the modified material under identical terms.

CC BY-SA includes the following elements:

BY - Credit must be given to the creator

SA - Adaptations must be shared under the same terms

© 2021 Global Health Labs, Inc

UNLESS OTHERWISE SPECIFIED
DIMENSIONS ARE IN MILLIMETERS [IN]
BREAK EDGES, .12-.25MM
BLEND ALL RADII, REMOVE ALL BURRS
SURFACE FINISH: 125 Ra MAX
ANGULAR: MACH ± 0°30', BEND: ±3°
ONE PLACE DECIMAL: ± .75MM
TWO PLACE DECIMAL: ± .25MM
THREE PLACE DECIMAL: ± .1MM

INTERPRET GEOMETRIC TOLERANCING PER: ASME Y14.5 - 2009

DO NOT SCALE DRAWING

	NAME	DATE
DRAWN	MB	Jan 02, 2020
CHECKED		

MATERIAL: AISI Type A2 Tool Steel

FINISH:

COMMENTS:

DESCRIPTION: NUT, 4 PRONG, V3

SIZE	DWG. NO.	REV.
B	041450	-

DRAWING SCALE 4:1 | SHEET 1 OF 1

Thursday, January 21, 2021 9:17:24 AM